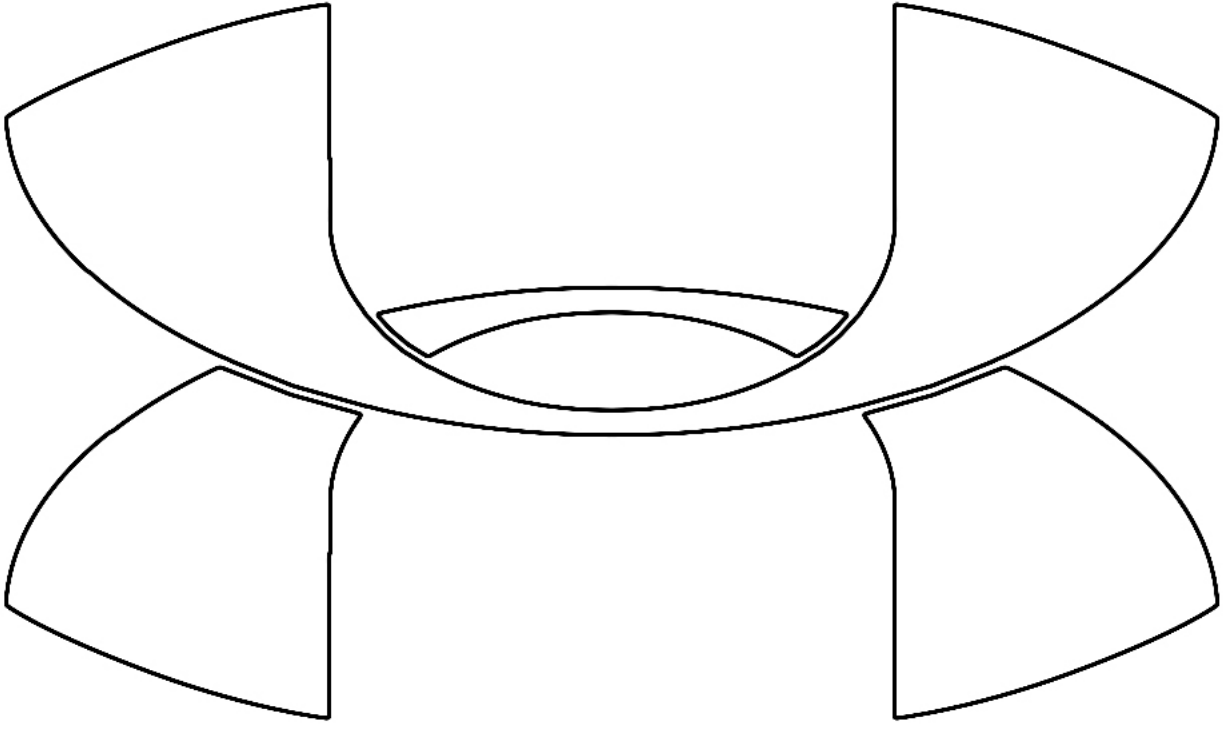

© FreeStencilGallery.com